Analytical Cume

6 March 2008

The Wheatstone Bridge below has two opposing arms with platinum resistance thermometers (PRT). A change in temperature will cause a change in resistance of the platinum coil. Platinum resistance thermometers are "hand wound" such that the fractional change in resistance, X, experienced by all thermometers to one degree change in temperature is the same. G, the gain of the difference circuit is 1000.

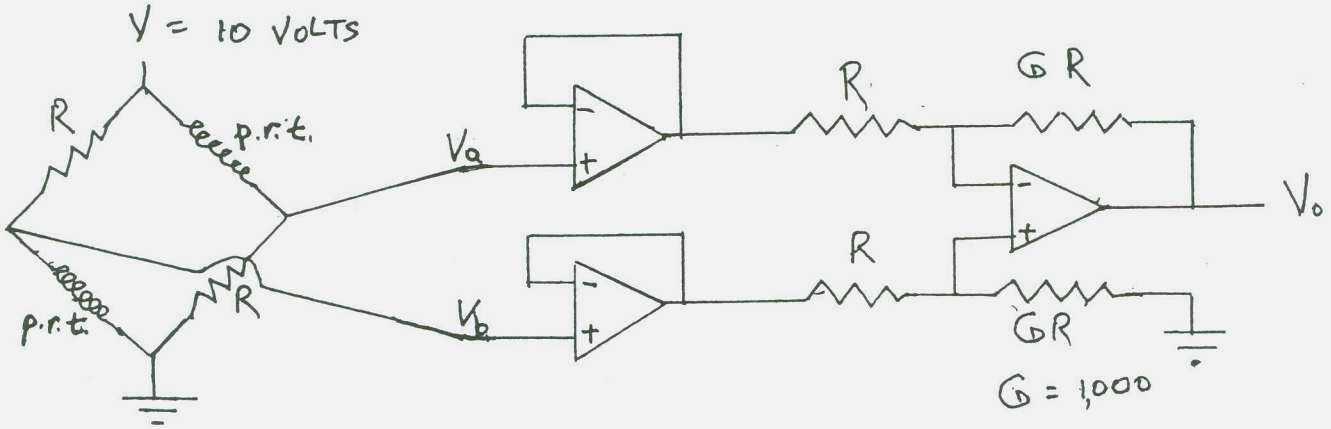

Assume at 40 °C the bridge is balanced and the resistance R, of each arm in the bridge is the same. Calculate the output of the Op Amp if a temperature change to 45 °C causes a fractional change in the resistance of the PRT's to be 0.0005. (Hint: at 45 oC the resistance of the PRT's will be give by R + XR).